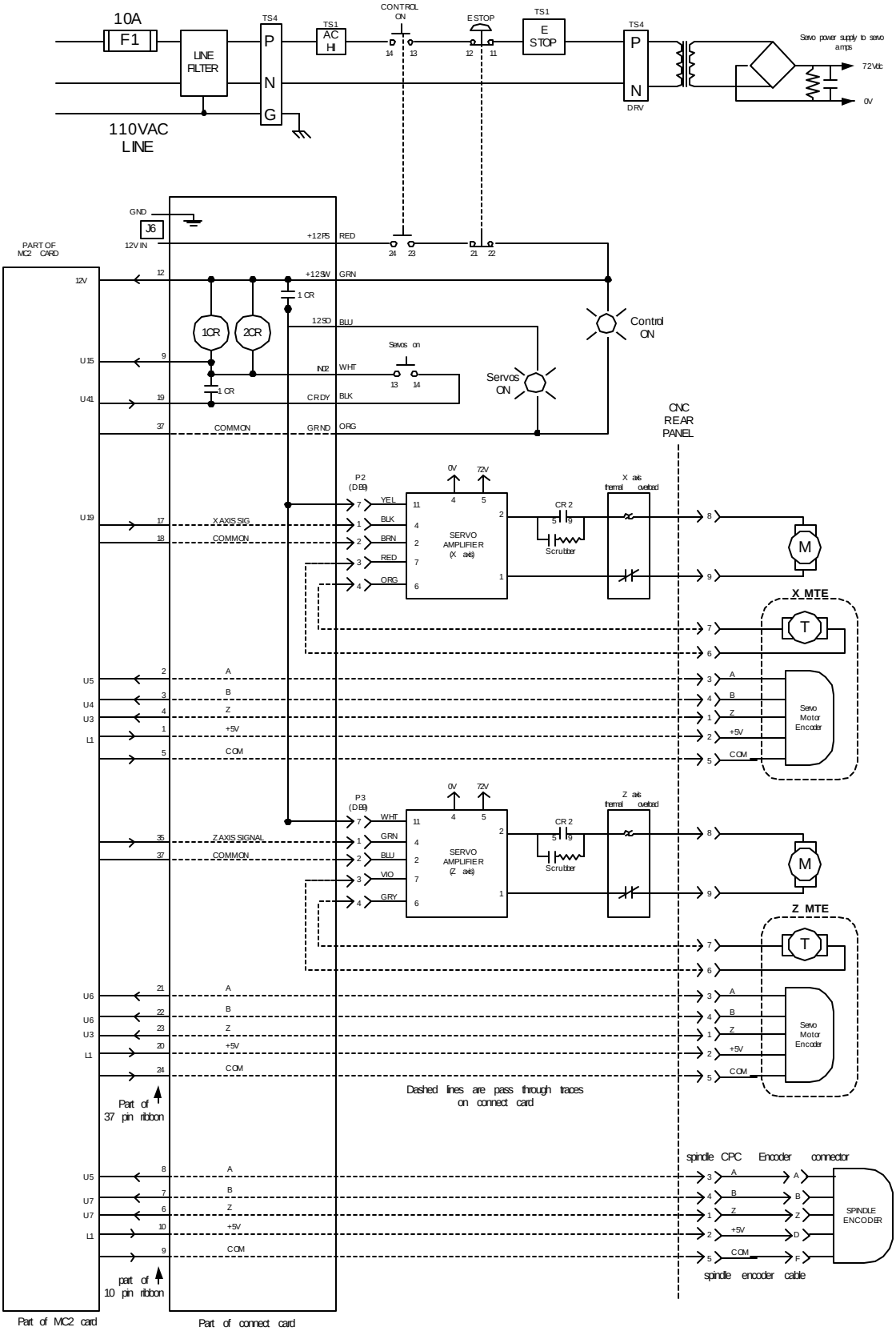
10A
F1
LINE FILTER
TS4
P
N
G
TS1
AC HI
CONTROL ON
ESTOP
TS1
E STOP
TS4
P
N
DRV
Servo power supply to servo amps
72Vdc
0V
110VAC LINE
GND
J6
12V IN
PART OF MC2 CARD
+12RS RED
+12SW GRN
12SD BLU
IN2 WHT
CRDY BLK
GRND ORG
COMMON
1CR
2CR
1 CR
Servos on
Servos ON
Control ON
CNC REAR PANEL
P2 (DB9)
YEL
BLK
BRN
RED
ORG
SERVO AMPLIFIER (X axis)
0V
72V
CR 2
Scrubber
X axis thermal overload
X MTE
X AXIS SIG
COMMON
A
B
Z
+5V
COM
Servo Motor Encoder
P3 (DB9)
WHT
GRN
BLU
VIO
GRY
SERVO AMPLIFIER (Z axis)
Z axis thermal overload
Z MTE
Z AXIS SIGNAL
Dashed lines are pass through traces on connect card
Part of 37 pin ribbon
spindle CPC Encoder connector
SPINDLE ENCODER
spindle encoder cable
part of 10 pin ribbon
Part of MC2 card
Part of connect card